18.Oil Pump

A: REMOVAL

1) Remove the manual transmission assembly from the vehicle. <Ref. to 6MT-34, REMOVAL, Manual Transmission Assembly.>
2) Prepare the transmission for overhaul. <Ref. to 6MT-39, Preparation for Overhaul.>
3) Remove the extension case. <Ref. to 6MT-44, REMOVAL, Extension Case.>
4) Remove the transfer driven gear. <Ref. to 6MT-56, REMOVAL, Transfer Driven Gear.>
5) Remove the center differential. <Ref. to 6MT-58, REMOVAL, Center Differential.>
6) Remove the oil guide.

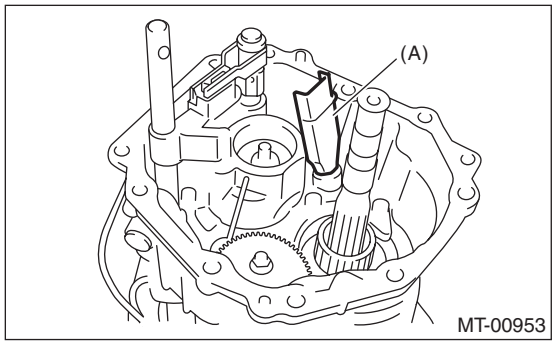

(A) Oil guide

7) Remove the snap ring and flat washer.

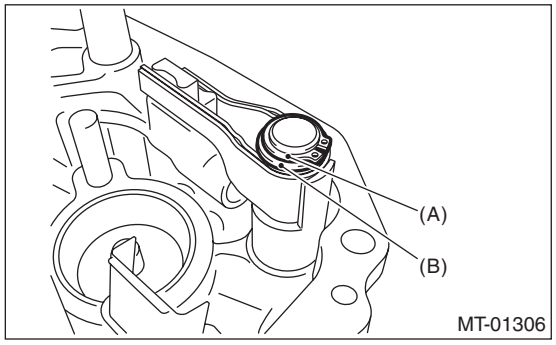

(A) Snap ring
(B) Flat washer

8) Using an ST, remove the neutral set spring and support.
ST1 18756AA000 CLAW
ST2 399893600 PLIER

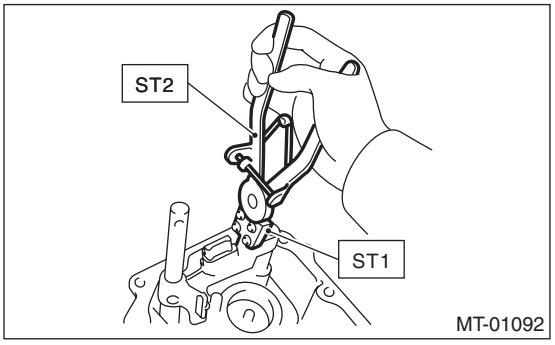

9) Lift the striking rod, and remove the spring pin.

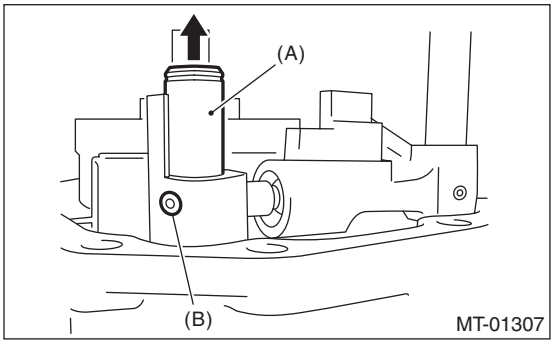

(A) Striking rod
(B) Spring pin

10) Remove the selector arm No. 2 and the shifter arm. (Transmission serial No. 144576 or earlier)

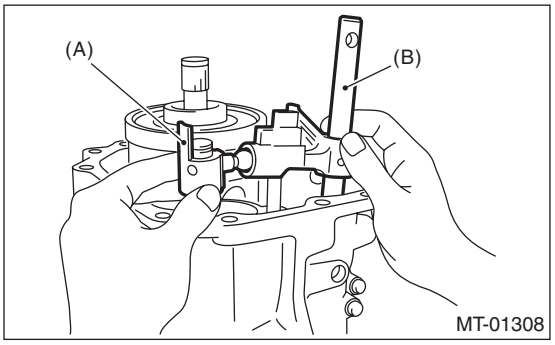

(A) Selector arm No. 2
(B) Shifter arm

11) Remove the selector arm No. 2, shifter arm, selector plunger and spring. (Transmission serial No. 144577 or later)

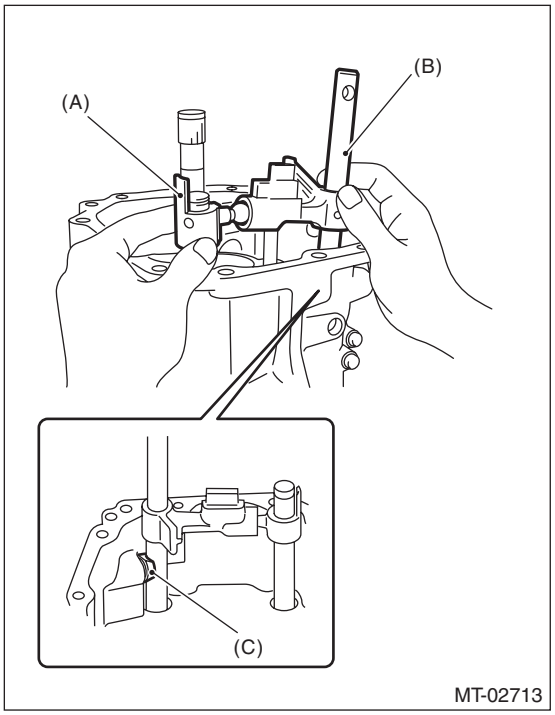

(A) Selector arm No. 2
(B) Shifter arm
(C) Selector plunger

12) Remove the oil pump shaft assembly and plate.

NOTE:
Using a general tool may cause damage. Remove the bolt using the ST.
ST 18663AA000 SOCKET

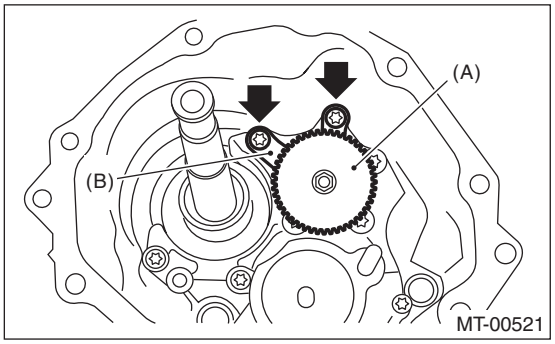

(A) Oil pump shaft ASSY
(B) Plate

13) Remove the oil pump cover assembly.

NOTE:
Using a general tool may cause damage. Remove the bolt using the ST.
ST 18663AA000 SOCKET

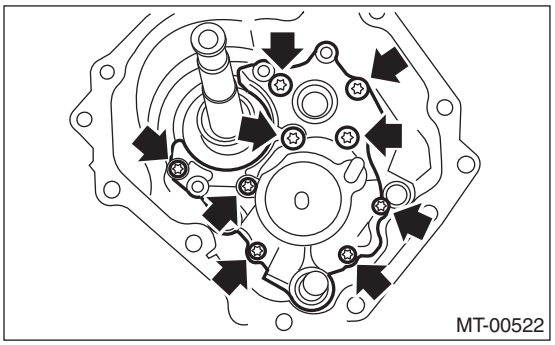

14) Remove the thrust washer on the main shaft section.
15) Remove the oil pump rotor.

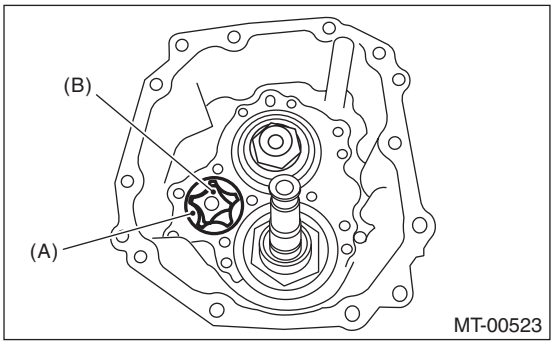

(A) Outer rotor
(B) Inner rotor

B: INSTALLATION

1) Apply oil to the outer rotor surface, and install to the transmission case.

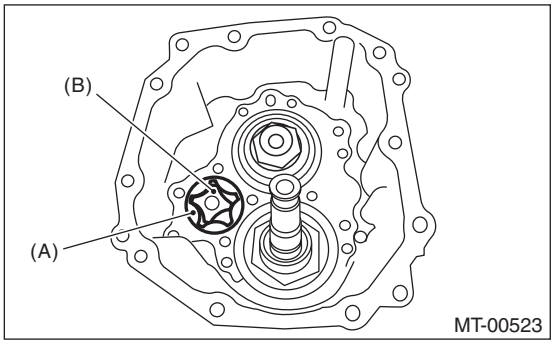

(A) Outer rotor
(B) Inner rotor

2) Attach the thrust washer to the main shaft.
3) Install the oil pump cover assembly.

Tightening torque:
25 N·m (2.5 kgf-m, 18.1 ft-lb)
ST 18663AA000 SOCKET

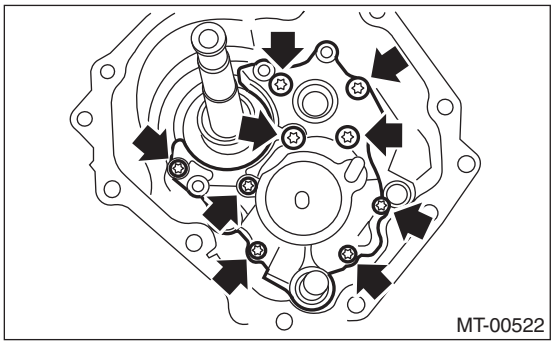

4) Remove the oil pump shaft assembly and plate.

Tightening torque:
25 N·m (2.5 kgf-m, 18.1 ft-lb)
ST 18663AA000 SOCKET

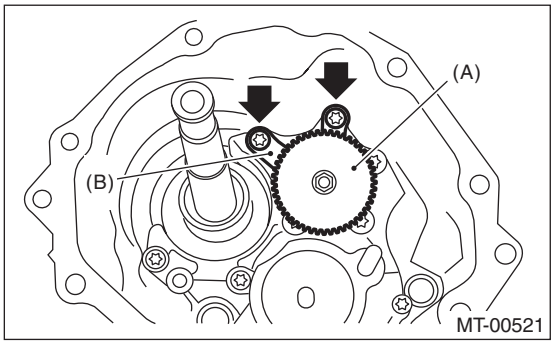

(A) Oil pump shaft ASSY
(B) Plate

5) When replacing the oil pump cover assembly, select the appropriate transfer driven gear and thrust washer, and install to the extension case. <Ref. to 6MT-46, ADJUSTMENT, Extension Case.>
6) Install the selector arm No. 2 and the shifter arm. (Transmission serial No. 144576 or earlier)

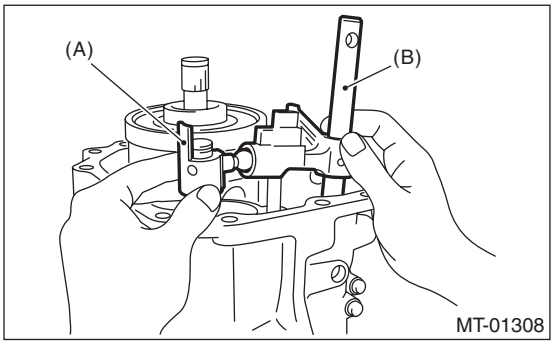

(A) Selector arm No. 2
(B) Shifter arm

7) Install the selector arm No. 2, shifter arm, selector plunger and spring. (Transmission serial No. 144577 or later)

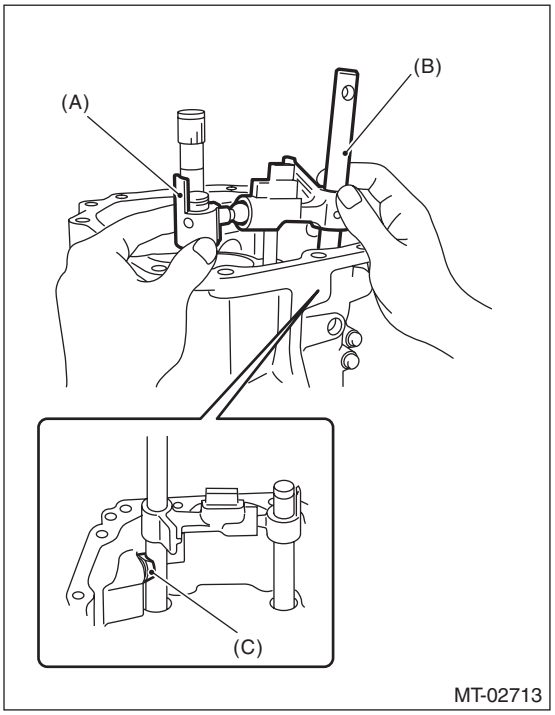

(A) Selector arm No. 2
(B) Shifter arm
(C) Selector plunger

8) Install a new spring pin.

9) Using the ST, install the neutral set spring and support.
ST1 18756AA000 CLAW
ST2 399893600 PLIER

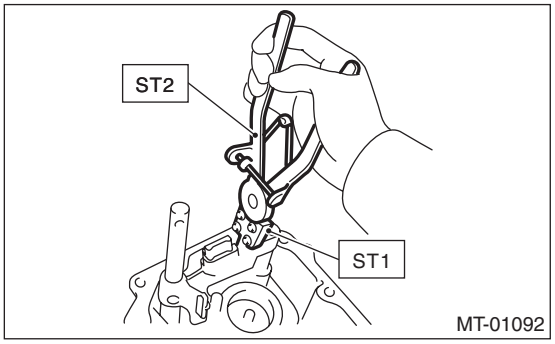

10) Install the flat washer and snap ring.
11) Install the oil guide.

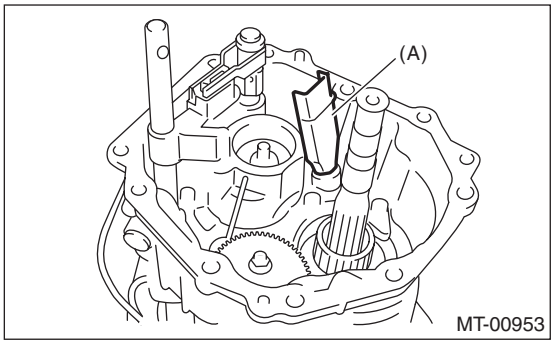

(A) Oil guide

12) Install the center differential. <Ref. to 6MT-58, INSTALLATION, Center Differential.>
13) Install the transfer driven gear. <Ref. to 6MT-56, INSTALLATION, Transfer Driven Gear.>
14) Install the extension case. <Ref. to 6MT-44, INSTALLATION, Extension Case.>
15) Install the manual transmission assembly to the vehicle. <Ref. to 6MT-36, INSTALLATION, Manual Transmission Assembly.>

C: INSPECTION

1) Check that there is no damage on the inner rotor and outer rotor. If damaged, replace the inner rotor and outer rotor as an assembly.
2) Tip clearance
Install the inner rotor and outer rotor to the transmission case. match the forward tip of the inner rotor and outer rotor, and measure the clearance. If the clearance exceeds specification, replace the inner rotor and outer rotor as a set.

Tip clearance specification:
Less than 0.15 mm (0.0059 in)

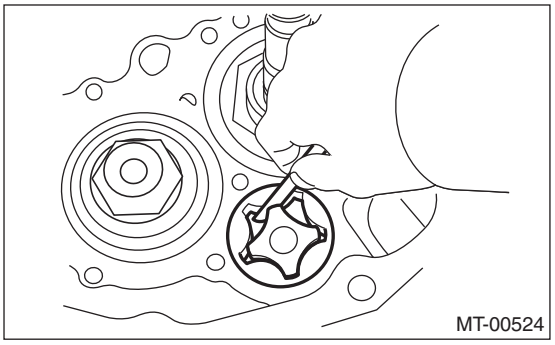

3) Side clearance
Measure from the transmission case to rotor. If the clearance exceeds specification, replace the inner rotor and outer rotor as a set.
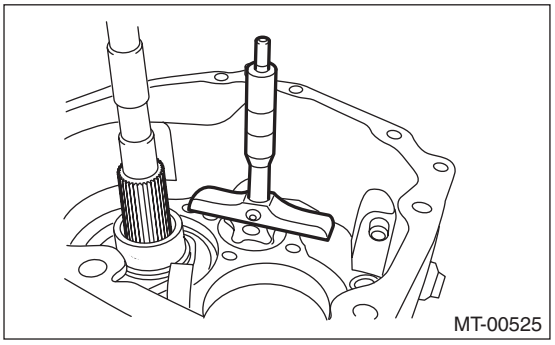
Side clearance specification:
0.03 — 0.10 mm (0.0012 — 0.0039 in)